PF STILE

CLASSIC ACCIAIO LINE

405 BASE

Steel base composed of rectangular painted cast iron ballast, cover in rectangular sections and columns in round sections and in satin inox, shiny chrome or painted steel. Equipped with a "Star" cross in die-cast aluminum or dial in aluminum for glass tops.

STANDARD HEIGHTS

dimensions in millimeters

TOP 1200 x 700

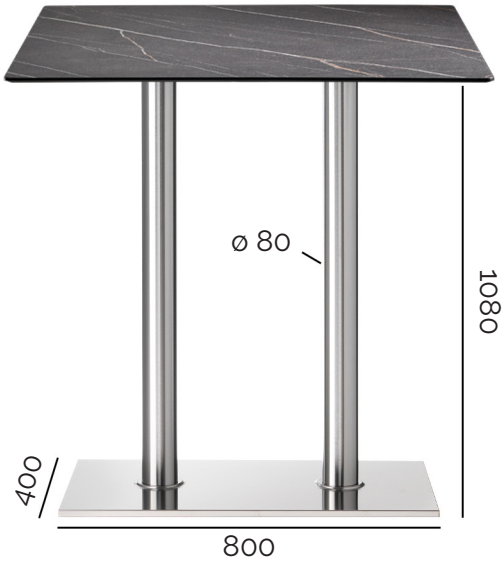

30 kg

TOP 1400 x 800 / 1600 x 800

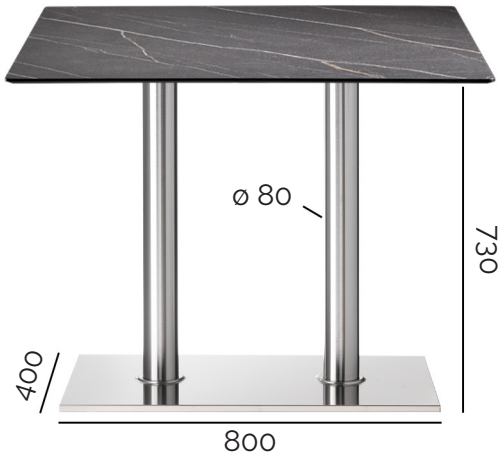

28 kg

TOP 1800 x 800 / 2000 x 800

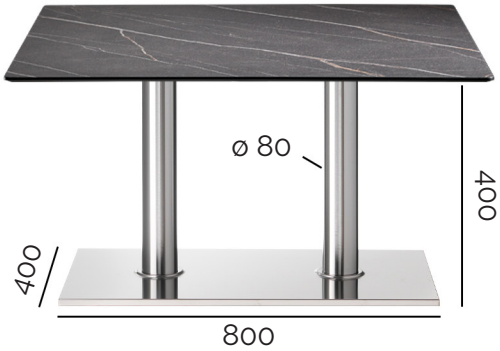

26 kg

Standard finishes

01. Satin inox, 02. Shiny chrome,
03. Orange peel effect black

Premium finishes

17. Industrial brushed galvanized,
18. Industrial brushed burnished steel,
19. Damasco black, 20. Cracked black,
21. Cracked white

Special finishes

04. Wrinkle white, 05. Wrinkle cappuccino,
06. Wrinkle grey, 07. Graphite sand gray,
08. Graphite black, 09. Polished black gold,
10. Polished black silver, 11. Orange peel aluminum,
12. PF red, 13. Polished metallic silver,
14. Burnished steel, 15. Rust, 16. Corten

* see "Warranty, cleaning and maintenance of the products, use and placement of the products"

N.B: Top measurements are indicative or recommended by PF STILE
N.B: The special and premium finishes are made with artisan procedures and there can be variations in color from production to production.

PF STILE

SOLID BEECH WOOD COLUMNS FOR THE BASE H 730 MM

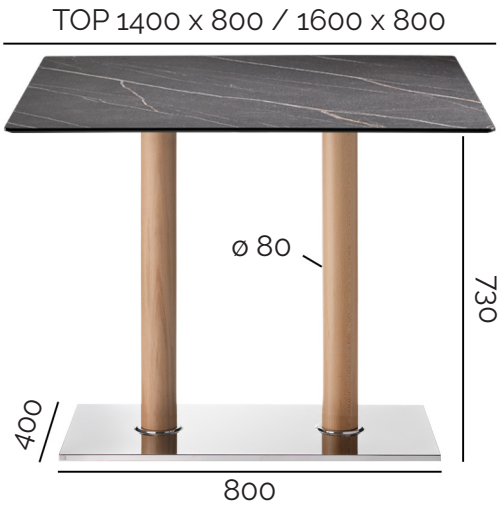

28 kg

Standard wood finishes

01. Natural, 02. Coffee brown, 03. Nutmeg

Special wood PF finishes

04. Silver, 05. Gold

TECHNICAL DETAILS

- Painted cast iron ballast with epoxy dust
- Satin inox, shiny chrome or painted steel columns and cover with epoxy dust
- "Star" crosses in die-cast painted aluminum with epoxy dust
- Dials in aluminum for glass tops
- 4 adjustable feet

EXTRAS

- Painting in any RAL color
- Exterior outdoor finishing (polyester painting) *
- Transparent, matte, anti-fingerprint polyester painting
- Single base cardboard packaging

* see "Warranty, cleaning and maintenance of the products, use and placement of the products"

N.B: Top measurements are indicative or recommended by PF STILE
N.B: Woods may vary slightly from production to production.